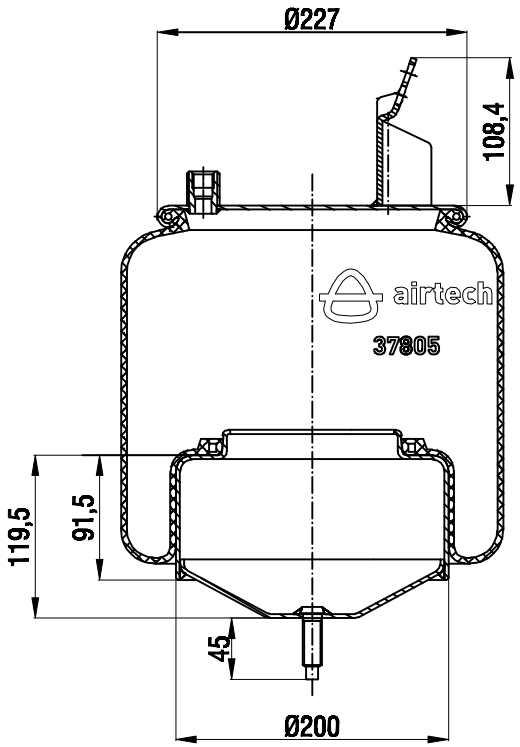

TOP VIEW

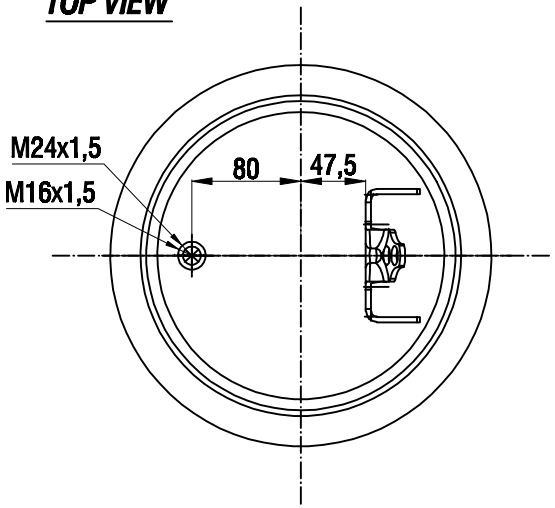

BOTTOM VIEW

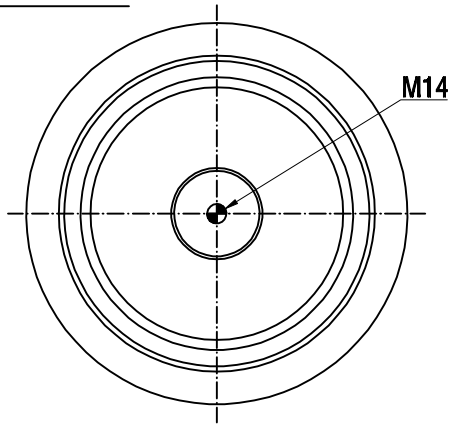

Drawings are prepared for catalogue study.

Changes					
0	First drawing	12.12.2012			
Issue	Changes	Date	Drawn by	Checked by	Approved by

PART WEIGHT: ...Kg.	Do not scale this drawing	Bolt/Stud	Combo stud	Air inlet	Threaded hole
	All rights of this document are the property of AKTAŞ A.Ş. Issue outside and copied, reproduced, made available to any third party in whole or part without written permission of AKTAŞ A.Ş.			ORDER NO:135592
PART NAME:	37805 K COMPLETE (AIRTECH)			aktaş