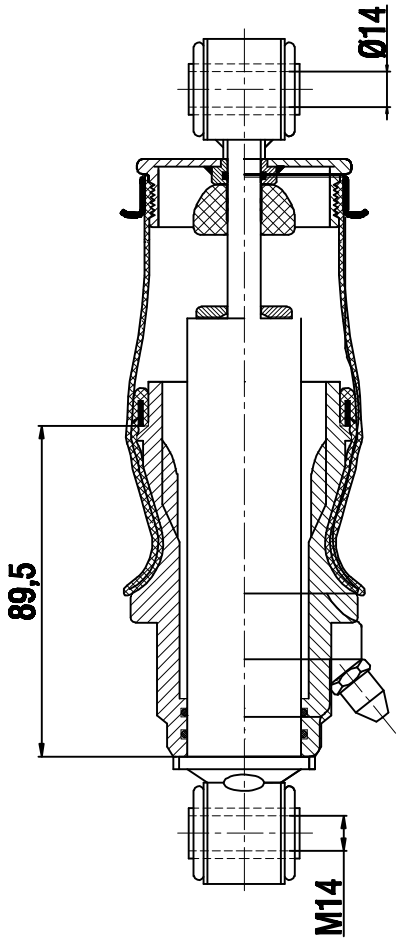

Drawings are prepared for catalogue study.

Changes						
	0	First drawing	17.03.2014			
	Issue	Changes	Date	Drawn by	Checked by	Approved by

PART WEIGHT: ...Kg.	Do not scale this drawing	Bolt/Stud	Combo stud	Air inlet	Threaded hole
	All rights of this document are the property of AKTAŞ A.Ş. It can not be used copied, reproduced, made available to any third party in whole or part without written permission of AKTAŞ A.Ş.				ORDER NO: 17000232
PART NAME:	A 3001301 K1 MERCEDES Amortisörlü Kabin Körüğü (Airtech)				aktaş