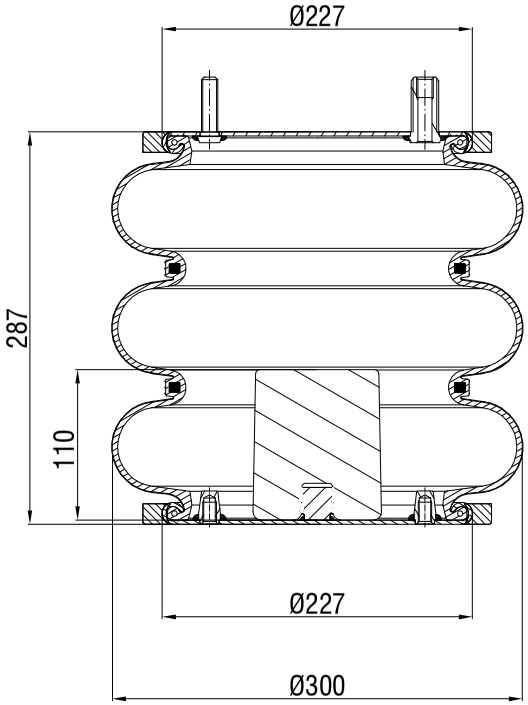

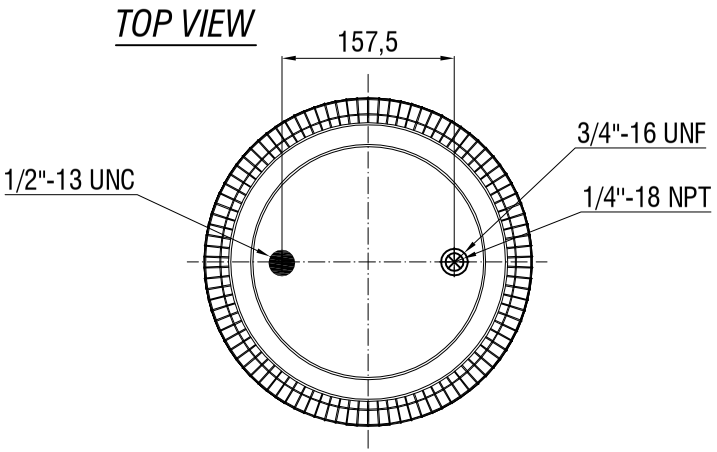

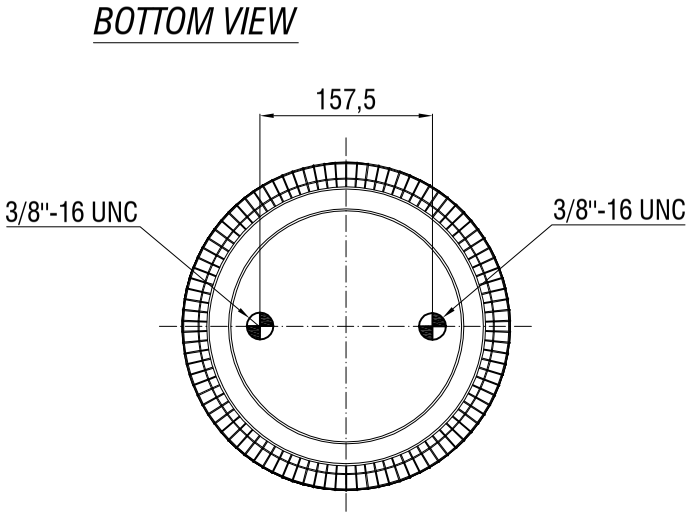

Drawings are prepared for catalogue study.

Changes					
0	First drawing	27.04.2018			
Issue	Changes	Date	Drawn by	Checked by	Approved by

PART WEIGHT: ...Kg.	Do not scale this drawing	Bolt/Stud	Combo stud	Air inlet	Threaded hole
	All rights of this document are the property of AKTAS A.S. It can not be used copied,reproduced,made available to any third party in whole or part without written permission of AKTAS A.S.				ORDER NO:16900432
PART NAME:	A3 300/K13 Metalli Katlı Körük(Airtech)				aktaş